5.2 Artificial Intelligence Of Things (AioT)

The artificial intelligence of things (AIoT) is the combination of AI technologies and the internet of things (IoT) infrastructure. AIoT's goal is to create more efficient IoT operations, improve human-machine interactions, and enhance data management and analytics.

AI is the simulation of human intelligence processes by machines, especially computer systems, and typically uses specialized AI algorithms, along with natural language processing, machine learning speech recognition and machine vision.

A smart home, for example, has many of its functions -- e.g., security; entertainment; kitchen appliances; and heating, ventilation and air conditioning -- handled by an advanced smart device. Adding AI can help develop an all-encompassing smart home management system that, once programmed, offers performance that can literally schedule, administer and maintain all household activities, while providing an easy-to-use interface to the homeowner.

Smart personal assistants become logical extensions of their human owners, as they enable greater capabilities and flexibility in support of their daily activities.

How does AIoT work?

In AI IoT systems and devices, AI is embedded into infrastructure components, such as programs and chipsets, which are all connected using IoT networks. Application programming interfaces (APIs) are then used to ensure all hardware, software and platform components can operate and communicate without effort from the end user.

When operational, IoT devices create and gather data, which AI analyzes to provide insights and improve efficiency and productivity. Insights are gained when an AI system allows the use of processes such as data learning.

AIoT systems are generally designed and configured either as cloud-based or edge-based.

IoT is a system of connected devices, mechanical and digital machines, or objects with unique identifiers with the ability to transfer data over a network without requiring human-to-human or human-to-computer interaction. For example, a *thing* in IoT can be a person's heart monitor implant, an automobile with built-in sensors to alert the driver when tire pressure is low, a personal assistant or any other object that can be assigned an Internet Protocol address and transfer data over a network.

Why is AIoT important?

Considering the capabilities AI can add to an IoT device or supporting network, think of adding AI as raising the performance bar on IoT technology. One of the key attributes of AI is its ability to automate tasks that would otherwise be performed manually.

Cloud-based AIoT

Commonly referred to as *IoT cloud*, cloud-based IoT is the management and processing of data from IoT devices using cloud computing platforms. Connecting IoT devices to the cloud is essential since that's where data is stored, processed and accessed by various applications and services.

Cloud-based AIoT is composed of the following four layers:

1. **Device layer.** This includes several types of hardware, including tags, beacons, sensors, cars, production equipment, embedded devices, and health and fitness equipment.
2. **Connectivity layer**. This layer comprises fields and cloud gateways consisting of a hardware or software element that links cloud storage to controllers, sensors and other intelligent devices.
3. **Cloud layer**. This consists of data processing via an AI engine, data storage, data visualization, data analysis and analytics, and data access via an API.
4. **User communication layer**. This layer is made up of web portals and mobile applications.

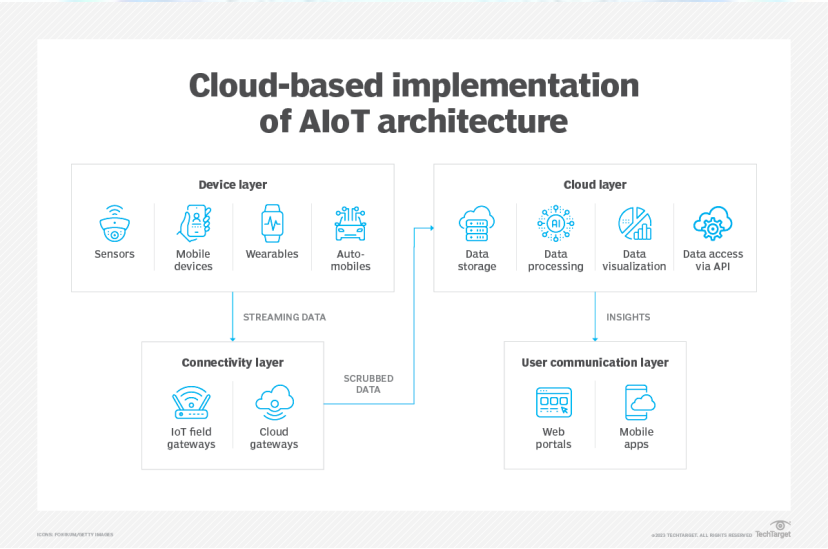

Edge-based AIoT

AIoT data can also be processed at the edge, meaning the data from IoT devices is processed as close to these devices as possible to minimize the bandwidth needed to move data, while avoiding possible delays to data analysis.

Edge-based AIoT consists of the following three layers:

1. **Collection terminal layer.** This covers a range of hardware devices, such as embedded devices, cars, manufacturing equipment, tags, beacons, sensors, mobility devices, and health and fitness equipment, that are connected to the gateway over existing power lines.
2. **Connectivity layer.** This consists of the field gateways that the collection terminal layer is connected to over existing power lines.
3. **Edge layer**. This layer includes facilities for data storage, data processing and insight generation.

Figure 2 depicts an edge-based AIoT implementation.

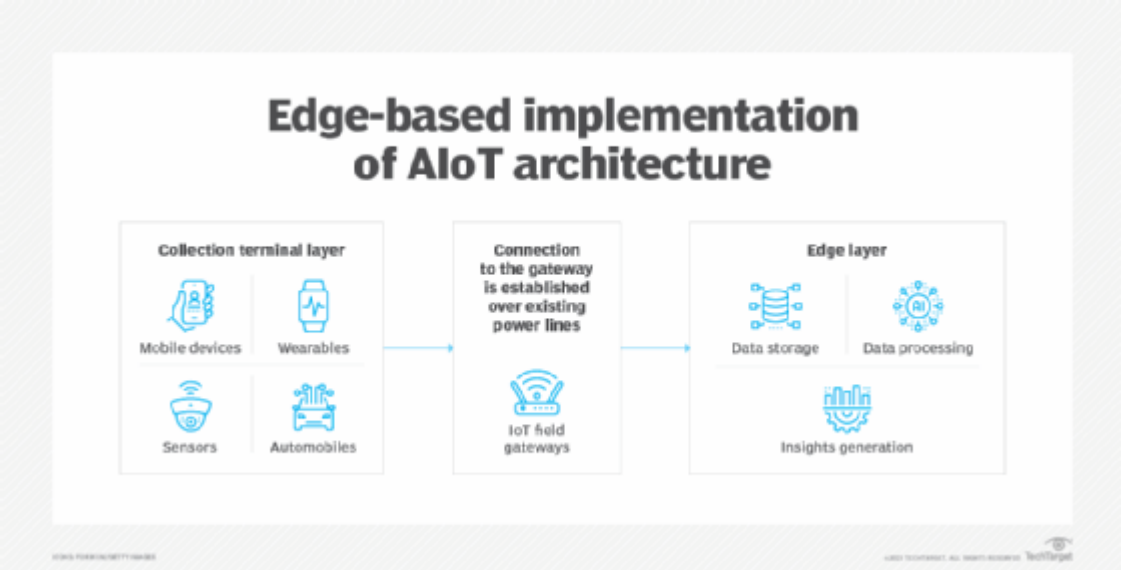

Figure 2. The AIoT data collected is processed closer to the source, or edge.

Applications and examples of AIoT

Although many AIoT applications focus on the implementation of cognitive computing in consumer appliances, the following are several examples of the wider use of AIoT:

- **Smart office buildings**. AI and IoT converge in smart buildings. Companies opt for a network of smart environmental sensors installed within their offices that detect the presence of people and automatically alter the lighting and temperature to maximize energy savings. In addition, facial recognition technology enables smart buildings to control access by using linked cameras and AI to compare live photos with a database to determine who gets access.
- **Enterprise and industrial**. Manufacturers use smart chips to detect when equipment isn't functioning properly or a part needs to be replaced.
- **Social media and human resources (HR).** AIoT tools can be integrated with social media and HR-related platforms to create an AI decision-as-a-service function for HR professionals.
- **Autonomous vehicles**. These vehicles, as noted in Figure 3, rely on multiple video cameras and sensor systems to gather data about nearby vehicles, monitor driving conditions and look for pedestrians.
- **Autonomous delivery robots**. Sensors gather data about the robot's environment -- for example, a warehouse -- and then use AI to make traversal-based decisions.
- **Healthcare.** Medical devices and wearables collect and monitor real-time health data, such as heart rate, and can detect irregular heartbeats.
- **Wearable devices.** Wearable technology can monitor and analyze personal health data to offer insights into a person's fitness, sleep and general well-being.
- **Collaborative robots.** Cobots are intended to assist people in the manufacturing and assembly of components. They aid humans in various tasks, such as product production, assembly, packaging and quality control, by using data from IoT devices and AI tools, including computer vision.
- **City brains.** City brains are intended to promote urban development by combining machine intelligence and real-time municipal data. For example, AIoT systems can process massive logs, videos and data streams from systems and sensors throughout an urban center to detect issues such as illegal parking, road accidents and changing traffic lights.

Cyber-Physical System

A Cyber-Physical System (CPS) is a computing system that integrates physical processes with computational algorithms and networked sensors to monitor and control physical processes in real time. This technology connects the physical and virtual worlds, enabling seamless interaction between humans and machines. CPS finds applications in various domains, including smart grids, autonomous vehicles, healthcare systems, and industrial automation, where it enhances efficiency, safety, and decision-making capabilities through interconnectedness and automation.

Features of Cyber-Physical System

In terms of the cyber-physical system, some features are classified.

1. **Reactive Computation:** Reactive systems, on the other hand, continuously interact with the environment through inputs and outputs. As a classic example of reactive computation, consider a car cruise control program.
2. **Network Connectivity:** CPS systems must utilize the network connectivity basis of communication between the cyber and physical world.
3. **Robustness & Reliability:** To ensure safe and effective operation in dynamic environments, CPS must need efficient reliability.
4. **Concurrency:** In cyber-physical systems refers to the simultaneous execution of multiple tasks or processes in a coordinated manner.
5. **Real-Time Computation:** CPS systems have real-time computation capabilities that allow for dynamic decision-making based on physical real-world data.
6. **Safety-Critical Application:** In terms of the CPS applications where the safety of our systems higher priority over the performance and development of the system.

Characteristics

- It is a combination of Physics with cyber Components networked which is interconnected.
- CPS systems are to monitor and control physical processes in a seamless manner.
- In CPS systems sensors and Actuators work in the feedback loop.
- In CPS systems devices are designed to interact with physical processes and control them.
- The CPS systems are more complex compared then IoT devices.

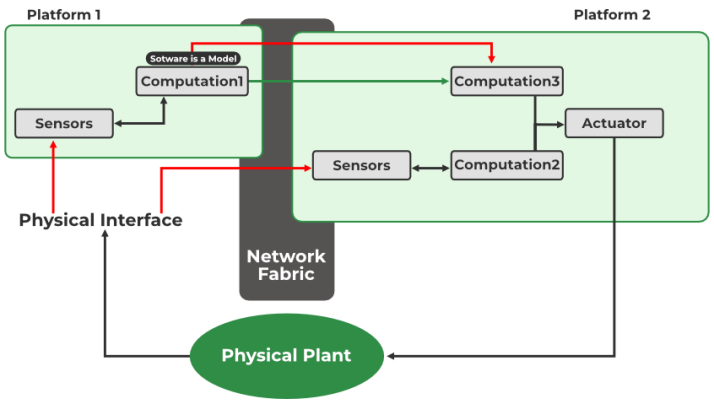

Applications of Cyber-Physical System

Cyber-Physical systems have the widest application in the real world with technology, cps is mostly applied in many fields as you can see

- **Agriculture:** Through the cps systems we can develop such kinds of sensors and tractors or harvesters that provide information on soil type and condition.
- **Aeronautics:** Aeronautics is one area that can benefit from CPS integration. In Aeronautics, CPS can be used to improve aircraft control and safety and improve performance and efficiency.
- **Healthcare and Personalized Medicine:** CPS systems have the technology which involves the use of connected medical devices and wearables to monitor patients' health data.
- **Civil Infrastructure:** Cyber-physical systems are using infrastructure improvement with some new efficiency technology. Advanced digital technology like IoT and sensors etc.
- **Manufacturing:** In manufacturing CPS can monitor and control the production process in real-time, improving quality and reducing scrap.

Transportation: In transportation, CPS can improve safety and efficiency through intelligent traffic management systems, vehicle-to-vehicle communications, and self-driving vehicles