Architecture of ESP32

1. Overview

- ESP32 is a **32-bit low-power System-on-Chip (SoC)** developed by Espressif Systems.
- It combines a dual-core processor, Wi-Fi, Bluetooth, memory and many peripherals on a single chip.
- Widely used in IoT, embedded systems and wireless communication applications.

1.1 Block Diagram

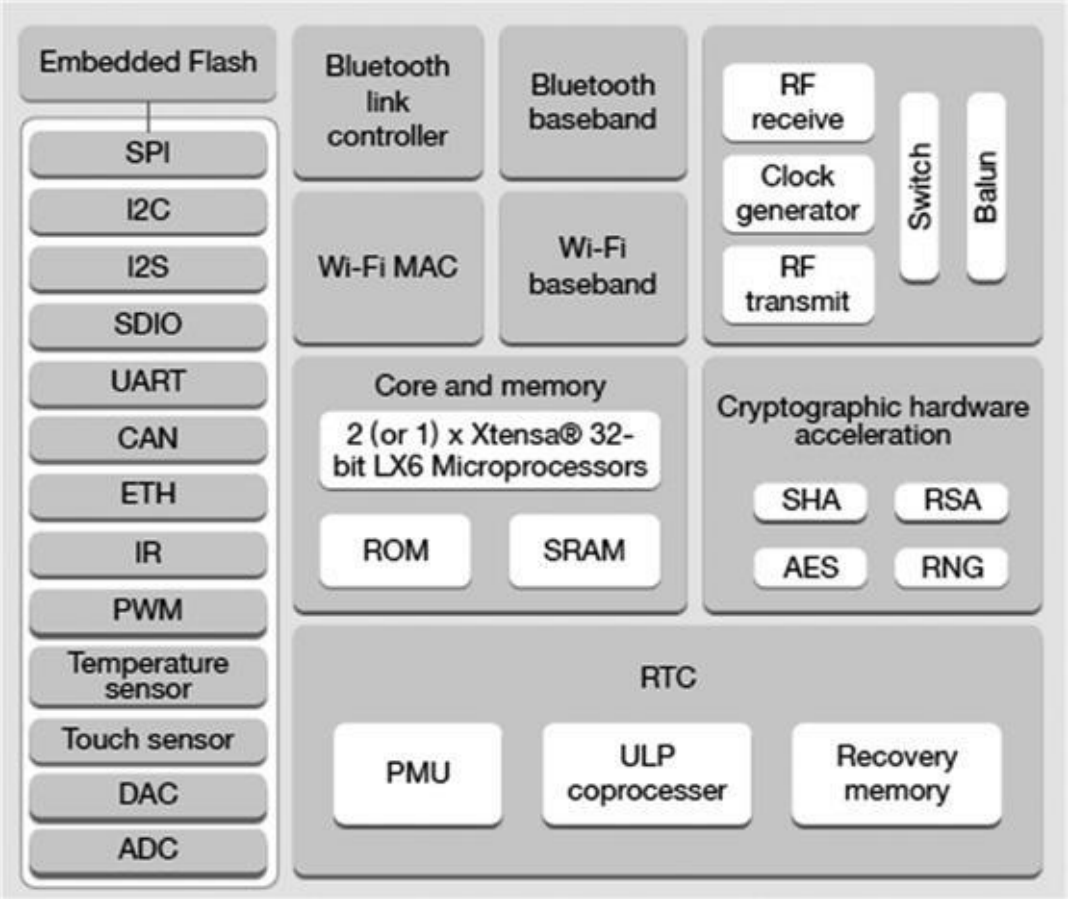

Figure 1.4 ESP32 block diagram

- Centre: dual-core Xtensa LX6 processor and memory.
- Left: peripheral interface blocks – SPI, I2C, I2S, SDIO, UART, CAN, ETH, IR, PWM, temperature sensor, touch sensor, DAC, ADC.
- Top middle: Bluetooth and Wi-Fi modules. Top right: clock generator and RF transceiver.
- Middle right: cryptographic hardware accelerators – SHA, RSA, AES, RNG.
- Bottom middle: RTC, PMU, ULP co-processor and recovery memory.

2. Dual-Core Xtensa LX6 Processor

2.1 Specification

- Dual-core, each processor 32-bit; maximum clock speed **240 MHz**.
- Supports 7-stage pipelining for faster execution.
- Up to 70 external and internal interrupt sources with 32 interrupt vectors; debugging through the JTAG interface.
- Includes:
  - Floating Point Unit (FPU)
  - DSP instructions
  - 32-bit multiplier and 32-bit divider
  - 40-bit MAC (multiply and accumulate)

2.2 Features

- Executes user programs
- Supports multitasking
- Faster data processing
- Handles interrupts efficiently

3. Memory

3.1 Internal Memory

- 520 KB SRAM and 448 KB ROM (for booting) on chip.
- The RTC module contains 8 KB slow memory and 8 KB fast memory.
- 1 Kbit eFuse: 256 bits used for the MAC address and chip configuration; remaining 768 bits reserved for customer applications.

3.2 External Memory

- Up to 4 × 16 MB external flash and SRAM accessed through a high-speed cache.
- Up to 16 MB of external flash mapped onto the CPU code space; up to 8 MB of external flash/SRAM mapped onto the CPU data space.
- Data read is supported on both flash and SRAM, but data write only on SRAM.

4. Timers, Watchdogs and Clocks

4.1 General Purpose Timers

- 4 × 64-bit software-controllable timers with 16-bit pre-scalers (2 to 65535) and auto-reload up/down counters.
- Can generate interrupts if configured.

4.2 Watchdog Timers

- Three watchdog timers with programmable timeout values: two main watchdog timers inside the general-purpose timers and one RTC watchdog timer inside the RTC module.
- Action on watchdog reset: interrupt, CPU reset, core reset or system reset.

4.3 System Clock

- An external crystal controls system timing at reset; the clock is typically 160 MHz, configured with a PLL.
- An accurate 8 MHz internal clock is also available; the programmer selects the external or internal clock.

4.4 Real Time Clock (RTC)

- Can be clocked by: external 32 kHz crystal; internal RC oscillator (typically 150 kHz); internal 8 MHz oscillator; or internal 31.25 kHz clock (8 MHz oscillator divided by 256).

5. Analog and Sensing Peripherals

Peripheral	Description
ADC	18 channels of 12-bit ADC; small analog voltages can be measured by configuring some pins as programmable gain amplifiers
DAC	Two independent 8-bit DACs
Hall sensor	Resistor-based; a small voltage measurable by the ADC develops in a magnetic field
Temperature sensor	Measures −40 °C to +125 °C, converted by an ADC. Affected by chip temperature and active modules, so suitable only for measuring temperature changes, not absolute temperature
Touch sensor	Up to 10 capacitive touch sensors; detect capacitance change when a GPIO pin is touched by a finger or other object

6. Digital Interfaces and I/O

6.1 GPIO

- 34 GPIOs configurable as digital, analog or capacitive touch.
- Digital GPIOs can have internal pull-up or pull-down resistors or be set to high impedance.
- Input pins can accept interrupts on edges or level changes.

6.2 Communication Interfaces

Interface	Details
UART	Three UARTs, up to 5 Mbps, for RS232, RS485 and IrDA serial communication
I2C	Up to two interfaces, master or slave; 400 Kbit/s fast mode; 7-bit/10-bit addressing
I2S	Up to two interfaces, master or slave, full or half duplex; clock 10 kHz to 40 MHz
SPI	Up to 4 SPI interfaces in master and slave modes
CAN	CAN bus controller to communicate with other ESP32 or CAN-compatible devices

Interface	Details
SD card	Supports SD memory cards, e.g. to store data
Infrared controller	Up to 8 channels of programmable IR remote transmission; waveforms stored in shared 512 × 32-bit memory
Pulse counter	Up to 8 channels to capture pulses and count edges; interrupt at a pre-defined count

6.3 PWM and LED PWM

- PWM controls motors, electric heaters, smart lights, etc. ESP32 offers one programmable hardware PWM module and 16 software-configurable PWM modules.
- LED PWM generates up to 16 independent waveforms with configurable duty cycle and period; duty cycle can be changed by software step by step.

7. Wireless, Security and Accelerators

- **Wi-Fi:** communicates with phones, PCs, laptops and iPads through a network router.
- **Bluetooth:** communicates with Bluetooth-compatible devices such as phones, PCs and iPads.
- **Hardware accelerators:** speed up mathematical operations for AES, SHA, RSA and ECC; they raise speed and reduce software complexity.