Farm Mechanization – Importance and Scope

1.1 Introduction

Farm mechanization refers to the use of mechanical power and machinery in place of, or in addition to, human and animal labour for carrying out various agricultural operations — land preparation, sowing, intercultivation, plant protection, harvesting, threshing, and post-harvest processing.

It is a key input for improving agricultural productivity, timeliness of operations, and reducing drudgery in farm work.

1.2 Importance of Farm Mechanization

1. Timeliness of operations – Mechanization allows farm operations (ploughing, sowing, harvesting) to be completed within the optimum time window, which is critical for yield. Delayed operations due to labour shortage can reduce yield significantly.

2. Increased productivity – Precise seed placement, uniform depth of tillage, and controlled input application (fertilizer, pesticide) improve overall crop output.

3. Reduction of drudgery – Mechanization reduces the physical strain on farmers and farm labour, especially in operations like ploughing, weeding, and harvesting.

4. Solves labour shortage – With rural-to-urban migration, agricultural labour availability during peak seasons (sowing, harvesting) has declined. Machinery fills this gap.

5. Reduces cost of cultivation – Although machinery has high initial investment, it reduces the recurring cost of labour, especially for large and repetitive operations.

6. Enables precision and quality of work – Uniform depth of ploughing, accurate seed-to-seed spacing, uniform fertilizer application, and better water management are possible only through mechanized methods.

7. Increases cropping intensity– Faster field operations allow multiple cropping in a season by reducing the turnaround time between harvesting one crops and sowing the next.

8. Facilitates adoption of improved practices – Mechanization is often necessary for adoption of scientific practices like precision farming, conservation tillage, and resource conservation technologies.

9. Boosts farm income – Efficient use of inputs, timely operations, and higher productivity translate into better economic returns for the farmer.

10. National food security – At a macro level, mechanization is essential to meet the food grain requirement of a growing population with limited cultivable land and labour.

1.3 Scope / Levels of Farm Mechanization

Farm mechanization can be classified into three broad levels based on the power source used:

LEVEL	POWER SOURCE	EXAMPLES
Manual mechanization	Human labour	Hand tools- spade, sickle, hand hoe
Animal mechanization	Draft animals	Country plough, animal drawn cart
Mechanical mechanization	Engine/ motor power	Tractors, power tiller, combine harvester

India currently has a mix of all three levels, with mechanical mechanization increasing steadily, particularly in states like Punjab, Haryana, and parts of Tamil Nadu.

1.4 Factors Affecting the Level of Farm Mechanization

- Farm size and land holding pattern

- Cropping pattern and cropping intensity

- Socio-economic status of farmers

- Availability of custom hiring services

- Terrain and soil type

- Government policy and subsidy support

- Availability of skilled operators and repair facilities

2: Classification of Farm Implements

2.1 Introduction

Farm implements and machinery are broadly classified based on the power source used to operate them, and further sub-classified based on the type of operation they perform. A clear classification helps in understanding the selection and application of the right implement for a given farm operation.

2.2 Classification Based on Source of Power

1. Manually operated implements – Operated by human power alone.

Examples: spade, hand hoe, sickle, khurpi.

2. Animal-drawn implements – Operated using draft animals such as bullocks, buffaloes, or camels.

Examples: country plough (desi plough), animal-drawn cart, bullock-drawn seed drill.

3. Tractor-operated / power-operated implements – Operated using tractors, power tillers, or self-propelled engines.

Examples: mould board plough (tractor-drawn), disc harrow, rotavator, combine harvester.

4. Self-propelled machines – Machines that have their own power unit built in and do not require a separate prime mover to pull them.

Examples: self-propelled combine harvester, self-propelled reaper.

2.3 Classification Based on Type of Operation

1. Tillage implements– Used for primary and secondary tillage operations (soil breaking, pulverizing, leveling).

Examples: mould board plough, disc plough, cultivator, harrow.

2. Sowing and planting equipment – Used for seed and seedling placement.

Examples: seed drill, planter, transplanter.

3. Intercultivation equipment – Used for weeding and inter-row operations after crop emergence.

Examples: power weeder, inter-cultivator.

4. Plant protection equipment – Used for applying pesticides, fungicides, and herbicides.

Examples: sprayers, dusters.

5. Harvesting equipment – Used for cutting and gathering mature crops.

Examples: reaper, combine harvester, sickle.

6. Threshing and post-harvest equipment – Used for separating grain from straw/chaff and further processing.

Examples: thresher, winnower, dryer.

7. Irrigation equipment – Used for water lifting and distribution.

Examples: pump sets, sprinkler and drip systems.

2.4 Classification Based on Method of Operation

1. Mounted implements – Fully carried on the tractor's three-point linkage during operation (no wheels of their own touching the ground for support).

Example: mounted mould board plough.

2. Semi-mounted implements – Partly supported by the tractor linkage and partly by their own wheel(s).

Example: certain disc ploughs.

3. Trailed (drawn) implements – Fully supported on their own wheels and pulled behind the tractor using a drawbar/hitch.

Example: trailed disc harrow, trailed cultivator.

2.5 Importance of Classification

- Helps in systematic study and selection of implements for specific operations.

- Assists in matching implement type with available power source (animal/tractor).

- Useful in extension and training programs for farmers.

- Forms the basis for standardization and testing of implements (as per BIS/IS standards).

3: Objectives of Tillage – Primary and Secondary Tillage

3.1 Introduction

Tillage is the mechanical manipulation of soil to create favourable conditions for seed germination, root growth, and crop production. It is one of the oldest and most fundamental farm operations.

3.2 Objectives of Tillage

1. To prepare a good seedbed – Loosening and pulverizing soil so seeds can be placed at the correct depth with good soil-seed contact.

2. To control weeds – Uprooting and burying existing weeds and weed seeds, reducing weed competition for the crop.

3. To improve soil aeration – Loosening compacted soil increases pore space, improving oxygen availability to roots and soil microorganisms.

4. To improve water infiltration and retention – Breaking up compacted layers allows better rainwater/irrigation water penetration and storage in the root zone.

5. To incorporate manures, fertilizers and crop residues – Mixing organic matter and amendments uniformly into the soil profile.

6. To control soil-borne pests and diseases – Exposing insect larvae, pupae, and pathogens to sun and predators by turning the soil.

7. To break hard pans/compacted layers – Deep tillage operations (subsoiling, chiseling) break plough-pan or hardpan layers that restrict root penetration.

8. To level the land – Proper leveling ensures uniform water distribution and prevents water logging in low spots.

9. To improve soil structure – Repeated but judicious tillage can improve granulation and crumb structure of soil, especially in heavy soils.

3.3 Primary Tillage

Primary tillage is the initial, deep tillage operation performed after harvest of the previous crop or before sowing, mainly to open up the soil.

Characteristics:

- Performed at greater depth (15–30 cm or more)

- Requires higher draft/power

- Produces large clods that are broken down later by secondary tillage

- Usually done once per season

Objectives:

- Opening up compact soil

- Inverting/turning the soil layer to bury weeds, stubble, and previous crop residue

- Exposing soil to weathering (sun, rain) for pulverization

Common implements: mould board plough, disc plough, chisel plough, subsoiler.

3.4 Secondary Tillage

Secondary tillage refers to the operations carried out after primary tillage to further break clods, level the field, and prepare a fine seedbed.

Characteristics:

- Performed at shallower depth (5–15 cm)

- Requires comparatively lower draft/power

- May be repeated (harrowing, planking done multiple times)

- Produces fine tilt suitable for sowing

Objectives:

- Pulverizing clods left after primary tillage

- Leveling and smoothening the field surface

- Mixing manures/fertilizers into the topsoil

- Controlling emerging weeds

Common implements: disc harrow, spike-tooth harrow, cultivator, rotavator, leveler/planker.

3.5 Comparison – Primary vs Secondary Tillage

Aspect	**Primary tillage**	**Secondary tillage**
Depth of operation	Deep (15-30 cm +)	Shallow (5-15 cm)
Power requirement	High	Comparatively low
Timing	First operation after harvest	After primary tillage, before/ at sowing
Purpose	Opening/ inverting soil, burying residue	Pulverizing, leveling, fine seedbed preparation
Frequency	Usually once	May be repeated
Implements	MB plough, disc plough, chisel plough, subsoiler	Harrow, cultivator, rotavator, leveler

4. Field capacity and field efficiency of tillage implements

4.1. Theoretical field capacity

- It is the rate of field coverage of the implement, based on 100 per cent of time at the rated speed and covering 100 per cent of its rated width.
- Theoretical field capacity in hectares / hr = width(cm)*speed(m/s)*36/10000

4.2. Effective field capacity

- It is the actual coverage of the machine based on the total field time. Effective field capacity is usually expressed as hectares per hour

Effective field capacity or Actual field capacity is calculated as follows

FCA= S*W*E/10*100 ha/h

Where

- FCA = effective field capacity, hectare per hr.
- S = speed of travel in km per hour.
- W = theoretical width of cut of the machine in metre, and
- E = field efficiency in per cent.
- **Soil inversion** = No. of weeds on the surface after ploughing in same area*100/ No. Of weeds on the surface before ploughing
- **Field efficiency**
- It is the ratio of effective field capacity and theoretical field capacity expressed in percent**.**

4.3. Soil tool interaction:

- It is the study of how mechanical implements deform, cut and displace soil.
- Simply, the way a soil reacts when a tool cuts, lifts, breaks, pushes or mixes it.
- Example: spade + soil = soil is cut, lifted and broken.

4.4. Three things decides soil-tool interaction

- **Tool factor:**

  These are related to the implement.

Example:

Shape, width, length, cutting angle(rake angle), working depth.

A sharp knife cuts vegetable easily

Similarly, a proper designed plough cuts soil easily.

- **Soil factors:**

  Different soils behave differently.

Sandy soil:

Loose, Low cohesion, easy to cut.

Clay soil:

Sticky, High cohesion, difficult to cut, requires more draft.

Loam soil:

Best for tillage.

- **Operating factor:**

  These depends on the operator.

Examples:

Speed

Depth

Soil moisture

If speed increases ⟶ draft increases

If depth increases ⟶ Draft increases a lot

4.5. What happens when tool enters soil?

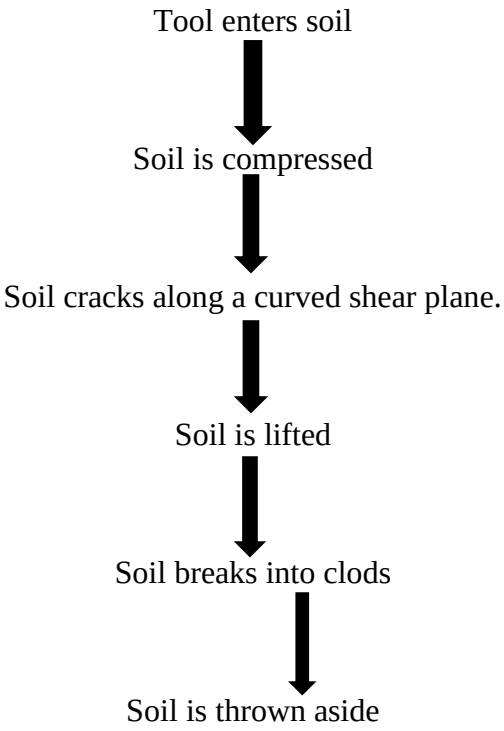

This entire process is called soil failure.

4.6. Types of forces acting on soil:

Compression force:

Pushes soil

Shear force:

Cuts soil

Tension force:

Pulls soil apart

4.7. Soil Failure Patterns

- **Crescent (brittle) failure** – Occurs in dry, hard soil; soil breaks in curved/crescent-shaped blocks ahead of the tool.

- **Shear failure** – Soil fails along a shear plane inclined to the direction of travel; common in moist, plastic soils.

- **Flow failure** – Occurs at high speeds; soil flows around the tool rather than breaking into blocks.

4.8. Forces acting on tillage tool

- A tillage tool moving through the soil is subjected to the following forces
- **Force of gravity acting upon the implement**
- **Soil reaction forces** which includes useful soil forces and parasitic soil forces (useful soil forces as those which the tools overcome in cutting, breaking and moving the soil whereas the parasitic forces including friction and rolling resistance are those acting upon the stabilizing surface such as landslide)
- **Forces exerted by the prime mower** if torque from rotary power transmission is not involved, the resultant of these forces is the pull of the power unit upon the implement

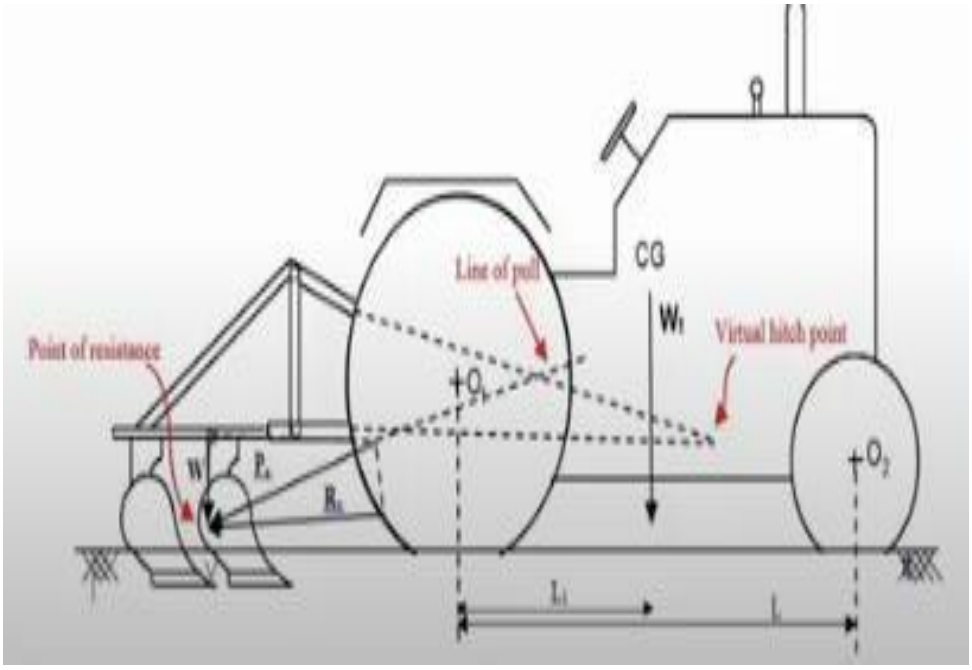

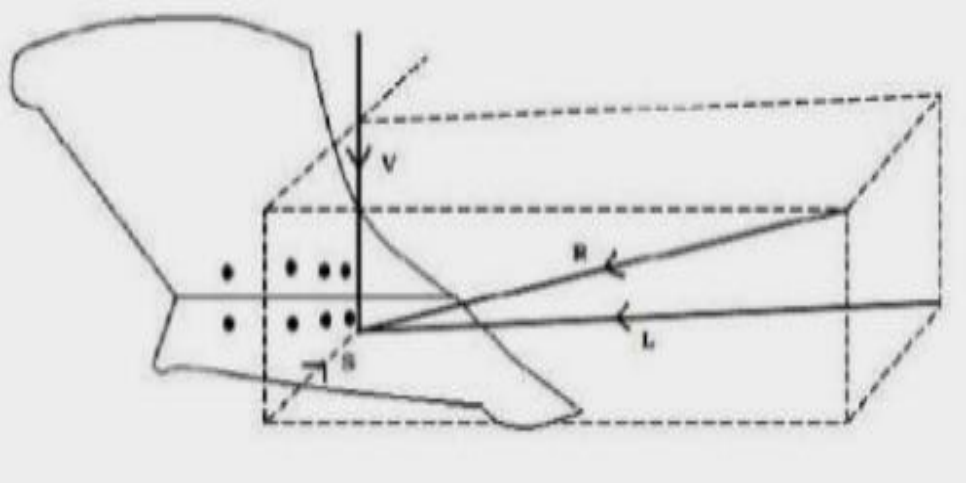

The following notations will be used while analyzing hitching of tillage implements:

W_t = Weight of tractor

CG = Center of gravity

L = Wheel base

L_1 = CG to rear wheel center distance

W= weight of implement

R_v = Soil reaction force

P_v = Line of pull

- These forces must be in equilibrium for satisfactory operation of the implement.
    - F = force exerted by the power unit which can have components in all major phases and associated with it is a couple
    - P = pull exerted by power unit has components in all three major planes associated with it is a couple
    - R = Resultant of all useful forces acting upon tool or implement Let us resolve the forces in three components L, S, V
    - L = Horizontal component also called draft
    - V = Vertical component It removes load from the front wheel of tractor and effects on tractive ability of tractor, stability and steerability
    - It helps in penetration and maintains working depth
    - S = Side draft or force. Maintains directional stability

•Φ Is the angle of inclination of force F in the transverse plane with horizontal

- Sin θ = V/R ; V = R sin θ 1
- COS θ = L/R; L = R cos θ 2
- From pull definition
- D = P COS Φ
- Therefore R = F cos Φ 3
- Put equ 3 in equ 1 & equ 2

- V = F COSΦ SIN θ
- L = F COSΦ COS θ
- In case of mounted implements, semi mounted and trailed by tractor the force P between the implement and tractor in the vertical plane is the force containing L and V components which is given by the relation

$$P^2 = L^2 + V^2$$

$$P = F \cos \Phi$$