PLANTER

Planter is a sowing equipment used for sowing those seeds which are larger in size and can not be handled by seed drills. Row to row and plant to plant spacing is maintained in a planter. Potato planter, maize planter , cotton planter are popularly used **Functions of a planter:**

(i) to open the furrow

(ii) to meter the seed

(iii) to deposit the seed in the furrow

(iv) to cover the seed and compact the soil over the seed.

Components of a planter: A planter consists of: (i) hopper (ii) feed metering device (iii) knock out mechanism (iv) cut-off mechanism (v) furrow opener (vi) furrow closer (vii) Drive mechanism (viii) clutch etc.. A planter has separate seed hopper for each row. Hopper is usually made of mild steel or any other suitable material.

Seed metering device in a planter: There are a number of seed metering devices available for use in a planter. The most common device is a rotating circular plate with cells which is provided at the bottom of seed hoppers. In some planters, vertical rotors , inclined rotors , canvas belts are also used The circular seed plates have notches or holes provided along the periphery called cells which pick up the seeds from seed hopper and drop them in to the seed tube. Depending upon the type of notches provided on the plates, the rotor is further classified in to. (i) Edge drop (ii) Flat drop and

(iii) Hill drop rotors. The cells carry the seeds in the cells of the rotor. The flat drop cell carries the seed on a platform of thickness half of the cell depth. Only one seed is allowed in the cell each time. In hill drop rotor, the cells are larger in size and admit many seeds at a time.

The rotating plate receives the seeds from the hopper. The plate moves under an arrangement called cut-off which allows only those seeds which are accommodated in the cells.

Edge-dr

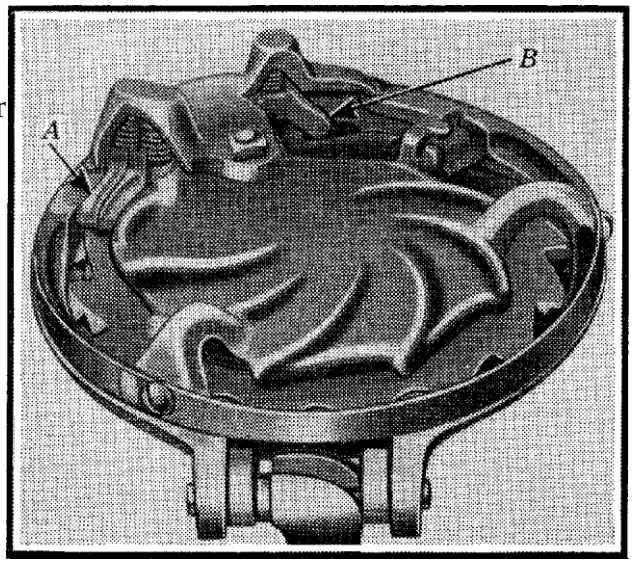

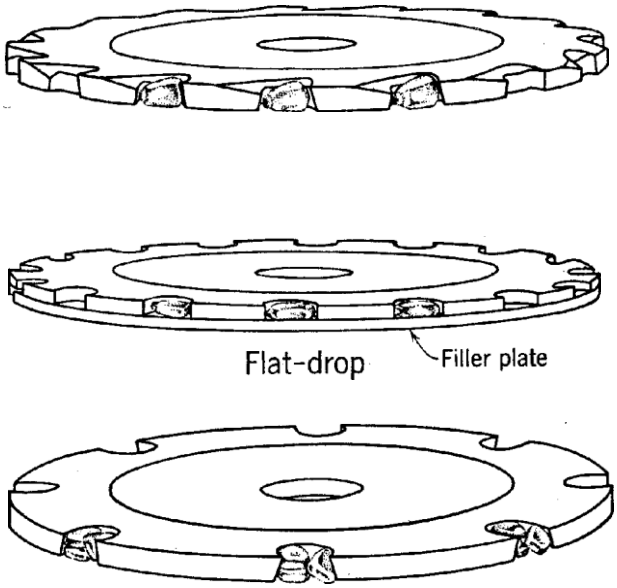

Hill-drop

Fig. *Left:* Hopper bottom for typical horizontal-plate corn planter. Note the spring-loaded (yielding) cutoff *A*, and the spring-loaded knockout pawl *B*. *Right:* Three types of edge-cell plates used interchangeably 1n this hopper bottom. (International Harvester Co.)

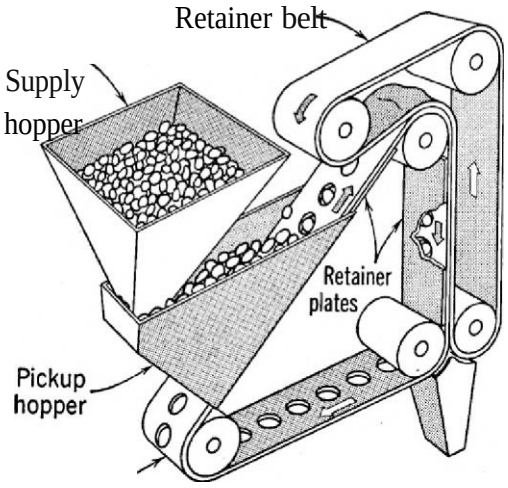

Cut-off mechanism: It cuts-off or brushes out or removes the excess seeds carried away by the cells thus allowing corrected number of seeds for delivery.

Knock out mechanism: It is a device which knocks out the seeds from the rotor cells . It consists of rollers or star wheels which by pressure releases the seeds from the cells. Seeds fall in to the seed tube and reach the furrow.

Spacing of seeds or hills: The spacing of seeds or hills in the row is determined by the ratio of peripheral speed of the rotor to the forward speed of the planter and the spacing between the cells in the rotor.

The accuracy of the planter depends upon several factors such as: (i) speed of seed plate (ii) shape and size of cells (iii) shape of hopper bottom and (iv) uniformity of seed size.

POTATO PLANTER

Potato is an important crop in India. It requires a lot of labour for sowing in the fields. Potato planter have two types of potato dropping mechanisms namely i.) automatic and ii). Semi-automatic

POTATO PLANTER (AUTOMATIC SEED DROPPING)

The automatic potato planter consists of a hopper for each row and cups with chain drive mechanism. The graded potatoes are picked up by the cups and carried to furrow opener spout and released in the furrows. A feeder roller connected to the compensating tray which carrying spare potatoes checks up each cup. If a cup is found empty, a potato is released from compensating tray ensuring uniform seed spacing with no missing .The fertiliser and pesticide can also be placed simultaneously. It can plant in 2-4 rows. Capacity is 6000- 14000 potatoes /hr

POTATO PLANTER (SEMI-AUTOMATIC)

It is used for planting of potatoes. The semi automatic potato planter consists of a hopper , metering disc and furrow openers. The fertilizer application unit can be attached separately. The potatoes from the hopper are placed in the metering disc which contains several compartments. The metering disc is rotated by gear drive mechanism. The ridges are formed by the furrow openers .The potatoes drop in the furrows due to gravity. It may plant in 2-4 rows. Field capacity is 0.15-0.35 ha/hr.

Transplanter:

Transplanter is equipment used for transplanting mat type paddy seedlings in the main field. It is suitable for all types of paddy varieties grown by transplanting. Both manually operated and mechanically operated transplanters are available. Before transplanting, the field has to be puddled well and allowed for one or two days for consolidation of soil so that the machine can work with out sinkage

MANUAL RICE PLANTER

The machine consists of a seedling tray, six numbers of forks, handle and skids. By pressing the handle, the forks pick-up the seedlings and plant them in 6 rows. For every stroke of the handle the seedling tray moves sideways for uniform picking of seedlings by the forks. The operator has to pull the machine after finishing planting in a row. The row to row spacing is 200 mm. Plant to plant spacing can be set as per space recommendation by pulling the unit manually to the required distance. It can

cover 0.25 ha/ day. Two men labour are required one for pulling the unit and another for transporting the mat seedlings. It saves time and money when compared to manual transplanting



Six row manual rice transplanter

SELF PROPELLED PADDY TRANSPLANTER

The self propelled paddy transplanter consists of (i) Air cooled gasoline engine (ii) Main clutch (iii) Running clutch (iv) Planting clutch (v) Seedling table (vi) Float (vii) Star wheel (viii) Accelerator lever (ix) Ground wheel (x) Handle (xi) Four bar linkage mechanism etc. The planter is powered by a 1.2-1,8 HP petrol engine.

Operation

The mat seedlings of age 15-20 days are used for machine planting. Mats are placed on the seedling table. After starting the engine, the running clutch and planting clutch are operated. Four bar linkage mechanism picks up 3 or 4 seedlings in each fork at a time from the mat and plant them in the puddled soil. A fiber glass float supports the machine on the soil while working in the field. Two ground wheels driven by the gear box moves the unit. There is a marker which demarcates the transplanting width while in operation. The machine maintains a row to row spacing of 28 cm to 30 cm and plant to plant spacing of 14 to 16 cm. The planting capacity of the machine is about 0.05 to
0.1 hectare per hour Power requirement is about 1.2 to 1.8 HP petrol engine. It saves time and money when compared to manual transplanting.

Drive for four bar mechanism

Power from the engine goes to the main clutch from where it is divided into two routes, one goes to planting clutch and the other goes to running clutch. Unless the planting clutch is operated , the four bar linkage mechanism does not work.





Self propelled rice transplanter

MODIFIED MAT NURSERY FOR MACHINE PLANTING

A modified mat nursery establishes seedlings in a layer of soil mix, arranged on a firm surface. Seedlings are ready for planting within 15-20 days after seeding (DAS). The modified mat nursery uses less land, can be installed closer to the house than traditional field nurseries, and uses less labor for both transporting seedling mats and replanting. As a result, root damage is minimal while separating seedlings.

Establishing a Modified Mat Nursery

1. Seed: To plant 1 ha (with 2 seedlings/hill at 20 X 20 cm spacing), use 18-25 kg good quality seeds (i.e., >80% germination and establishment).: Good seeds result in lower seed rate, more uniform germination, vigorous seedlings, less replanting, fewer weeds, and 5-20% higher yields.

2. Nursery area: Prepare 100 m^2 nursery for each 1 ha to be planted. Select a level area near the house and/or a water source. If area is not sufficiently compacted, then

spread a plastic sheet or banana leaves on the marked area to prevent roots growing into soil.

3. Soil mixture: Four (4) m^3 of soil mix is needed for each 100 m^2 of nursery. Mix 70- 80% soil + 15-20% well-decomposed organic manure + 5-10% rice hull or rice hull ash. Incorporate around 20 kg N/ha (1.5 kg powdered di-ammonium phosphate or 2.0 kg 15- 15-15 powdered NPK fertilizer for every 100 m^2 of nursery area).

4. Pre-germinating seed: Soak the seeds for 24 h (some varieties may need longer to bud). Drain and incubate (cover and keep moist) the soaked seeds for 24 h. In this time, the seeds sprout (bud) and the first seed root grows to 2-3 mm long.

5. Laying the soil mixture: Place a wooden frame of 0.5 m long, 1 m wide and 4-cm deep divided into 4 equal segments on the plastic sheet or banana leaves. Fill the frame almost to the top with the soil mixture. Cover the seed with soil mix and wet.

6. Sowing: Sow the pre-germinated seeds uniformly and cover them with a thin layer of dry soil. (Approximately 1 seed/cm2)

7. Soaking the seedbed: (a) Sprinkle water immediately to soak the bed. (b) Remove the wooden frame and continue the process (i.e., fill soil mix-sow seed-cover seed-water) until the required nursery area is completed.

8. Watering: Water the nursery as needed to keep the soil moist. Protect the nursery from heavy rains for the first 5 days. If the nursery can be flooded then at 7 DAS, maintain a 1-cm water level around the mats. Drain the water 2 days before removing the seedling mats for transplanting

9. Fertilizer topdressing (optional): If temperature and water are adequate, but the seedlings show yellowing (N deficiency). Sprinkle seedlings with 0.5% urea (1.5 kg Urea in 300 l water/100 m2).m

10. Lifting seedling mats: Seedlings reach sufficient height for planting in 15-20 DAS. Lift the seedling mats and transport them to main field.



(Source: http://www.knowledgebank.irri.org/landprep/index.php/modified-mat-nursery-pdf)

FIELD PREPARATION FOR RICE TRANSPLANTING

Plough the filed 20-25 cm deep using a mould board plough or wooden plough to expose the eggs of harmful insects, pests and rhizomes of weeds. Keep the field flooded or saturated with water. After two or three days, puddle the soil using a puddler three or four times with standing water and complete a week ahead of transplanting. Puddling helps to kill the weeds and buries them in puddle layer. The rate of germination of weeds is also reduced in subsequent growing period of crop. Puddling helps to create beneficial physical, biological and chemical conditions for the growth of rice plants. Soil surface is left in a more even condition. Apply uniformly half of nitrogen and total quantities of phosphorus and potash on drained surface at the time of last puddling and incorporate in the top 10-15 cm deep soil.

Fertilizer Broadcasters

A fertilizer broadcaster is a machine used to spread fertilizer uniformly over the entire soil surface (as opposed to placing it in bands or rows). Broadcasting is commonly used for basal application before sowing, or for top-dressing of standing crops, especially over large areas.

Types of Fertilizer Broadcasters

1. Based on power source:

- Manual (hand-operated/hand-cranked) broadcaster – knapsack or hand-held type, suited to small holdings.
- Tractor-mounted/tractor-drawn broadcaster – suited to medium/large holdings.
- Self-propelled broadcaster – used in large-scale commercial farms.

2. Based on spreading mechanism:

- Centrifugal (spinner disc) broadcaster – Fertilizer is dropped onto one or two rapidly rotating discs fitted with vanes; centrifugal force flings the fertilizer outward in a fan-shaped pattern over a wide swath width.
- Pendulum (oscillating spout) broadcaster – Fertilizer flows through a spout that oscillates side-to-side, distributing fertilizer over a swath width as the boom/spout swings.
- Pneumatic (air-boom) broadcaster – Fertilizer is metered and then carried through boom tubes by an air stream, delivering it uniformly at multiple points along the boom width; gives more precise, even distribution, especially for wider working widths.

Main Components

1. Hopper – Holds the fertilizer supply.

2. Metering mechanism – Controls the rate of fertilizer flow from the hopper to the spreading mechanism (commonly an adjustable gate/orifice or a metering roller).

3. Spreading mechanism – Spinner disc(s), oscillating spout, or air-boom system (as described above) that distributes the fertilizer over the field width.

4. Agitator – Prevents bridging/clumping of fertilizer in the hopper, ensuring uniform flow to the metering unit (especially important for moisture-absorbing fertilizers).

5. Drive mechanism – Ground wheel, PTO (power take-off from tractor), or hydraulic motor drives the spreading disc/mechanism and, where applicable, the metering unit.

Working Principle

- Fertilizer is loaded into the hopper; the agitator keeps it flowing freely.

- The metering mechanism releases fertilizer at a controlled rate onto the spreading mechanism.

- In centrifugal types, the rotating disc(s) fling the fertilizer outward in a broad arc, covering a swath width on either side of the machine.

- In pendulum types, the oscillating spout distributes fertilizer as it swings back and forth.

- In pneumatic types, an air stream carries metered fertilizer through boom tubes to multiple outlets, dropping it evenly along the boom.

- The operator/machine travels across the field in parallel passes, with a set overlap, to achieve uniform coverage.

Advantages

1. Covers large areas quickly, saving time and labour compared to manual/hand broadcasting.

2. Centrifugal types offer a wide working width, increasing field capacity.

3. Suitable for both basal application and top-dressing of standing crops.

4. Reduces drudgery associated with manual broadcasting.

Limitations

- Broadcasting (compared to drilling/banding) generally gives lower fertilizer use efficiency, as fertilizer is not placed close to the root zone.

- Centrifugal and pendulum types can give uneven distribution at the edges of the swath (overlap of passes is critical to avoid strips of under/over-application).

- Wind can affect distribution uniformity, especially in centrifugal types.

- Not suitable where precise band placement near the seed/root zone is required (a fertilizer drill is preferred in such cases).

Fertilizer Drills

A fertilizer drill is a machine used to place fertilizer in bands, below and/or beside the seed row, at a controlled rate and depth, rather than spreading it over the entire soil surface. Band placement close to the root zone improves fertilizer use efficiency compared to broadcasting.

Need for Fertilizer Drilling (Band Placement) over Broadcasting

1. Places fertilizer close to the root zone, improving nutrient availability to the crop.

2. Reduces fertilizer fixation/loss in the soil (e.g., phosphorus fixation is reduced when placed in a concentrated band rather than mixed throughout the soil).

3. Reduces weed growth compared to broadcasting, since fertilizer is not spread over the entire surface (fewer nutrients available to inter-row weeds).

4. Improves fertilizer use efficiency, allowing a given yield response with comparatively less fertilizer.

Main Components of a Fertilizer Drill

1. Fertilizer hopper/box – Holds the fertilizer to be applied.

2. Fertilizer metering mechanism – Meters fertilizer at the desired rate. Common types:

- Fluted roller type – similar to seed metering, adjustable effective flute length.
- Star wheel (notched wheel) type – a star-shaped wheel meters granular fertilizer.
- Internal double-run/agitator type – used for fertilizers prone to bridging/caking.

3. Agitator – Prevents bridging and caking of fertilizer in the hopper (important as many fertilizers are hygroscopic).

4. Fertilizer tube – Carries metered fertilizer from the metering unit down to the furrow opener/boot.

5. Furrow opener (fertilizer boot) – Places the fertilizer at the required depth, usually positioned slightly below and/or to the side of the seed placement point to avoid direct seed-fertilizer contact (which can cause "fertilizer burn" / reduced germination, especially with high-salt-index fertilizers).

6. Covering device – Closes the furrow/band after fertilizer placement.

7. Drive mechanism (ground wheel) – Drives the metering mechanism proportional to forward travel speed, similar to a seed drill.

Types of Fertilizer Placement (Relative to Seed)

1. Below and below-and-to-the-side placement – Fertilizer band is placed a few centimetres below and to the side of the seed; the most common and safest placement to avoid seedling damage while keeping nutrients accessible.

2. Side placement – Fertilizer placed beside the seed row, at seed depth or slightly deeper.

3. Deep placement – Fertilizer (especially nitrogen, e.g., urea supergranules/briquettes) placed at a greater depth in the root zone, common practice in transplanted rice to reduce nitrogen losses.

Seed-cum-Fertilizer Drill (Combined Operation)

Most practical field implements combine seed drilling and fertilizer drilling into a single seed-cum-fertilizer drill (as described in Chapter 2), where separate metering mechanisms and delivery tubes for seed and fertilizer are mounted on a common frame, with the furrow openers designed to maintain the correct vertical/horizontal separation between seed and fertilizer.

Advantages of Fertilizer Drilling

- Higher fertilizer use efficiency compared to broadcasting.

- Reduces nutrient losses (fixation, leaching of surface-applied nutrient, weed uptake).

- Can be combined with sowing in a single pass (seed-cum-fertilizer drill), saving time and labour.

- Reduces fertilizer cost per unit of yield response due to better placement.

Limitations

- Requires more precise calibration (rate and depth) compared to broadcasting.

- Slightly more complex machine (additional metering unit, tubes, and boot) increases cost.

- Requires careful adjustment of seed-fertilizer separation to avoid germination damage.

- Not suited for top-dressing of standing row crops in the same way broadcasters are (though some inter-row fertilizer applicators exist for this purpose).