MOULD BOARD PLOUGH

Mouldboard plough is one of the oldest of all agricultural implements and is generally considered to be the important tillage implement. Ploughing accounts for more traction energy than any other field operation. Mouldboard ploughs are available for animals, power tiller and tractor operation. While working, a mouldboard plough does four jobs namely a) cutting the furrow slice b) lifting the furrow slice c) inverting the furrow slice and d) pulverizing the furrow slice



Two bottom mouldboard plough



Tractor with two bottom mouldboard plough

5.1. COMPONENTS OF A MOULDBOARD PLOUGH

A animal drawn mouldboard plough consists of a) plough bottom b) beam and c) hitch bracket or clevis. A tractor drawn mouldboard plough consists of a) plough bottom

b) beam or standard c) main frame and d) hitch frame

a) **Plough bottom** – The part of the plough which actually cuts, lifts,

pulverizes and through the soil out of the furrow. It is composed of those parts necessary for the rigid structure required to cut, lift, turn, and invert the soil. Parts of the mouldboard plough bottom are a) Share b) Mould board c) Land side d) Frog and e) Tail piece. Share, landside, mouldboard are bolted to the frog which is an irregular piece of cast iron.

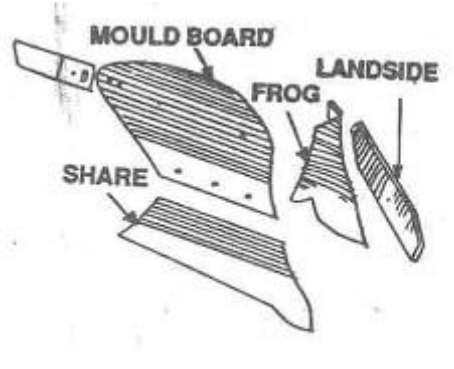

Components of Mould Board plough

* **Share:** It is that part of the plough bottom which penetrates into the soil and makes a horizontal cut below the surface.
* **Mould board:** It is the curved part which lifts , turns, and pulverizes the soil slice.
* **Land side:** It is the flat plate which presses against the furrow wall and prevents the plough from lateral swinging. The rear part of land side is called heel which slides on the bottom of the furrow
* **Frog:** It is the part to which share, land side and mouldboard are attached.
* **Tail piece:** It is an adjustable extension, which can be fastened to the rear of the mould board to help in turning the furrow slice.

5.2. DETAILS ABOUT DIFFERENT COMPONENTS OF MOULDBOARD PLOUGH

5.2.1. Share - It penetrates into the soil and makes a horizontal cut below the soil surface . It is a sharp, well polished and pointed component. Different portions of the share are called by different names such as

1) Share point 2) Cutting edge 3) Wing of share 4) Gunnel 5) Cleavage edge and 6) Wing bearing.

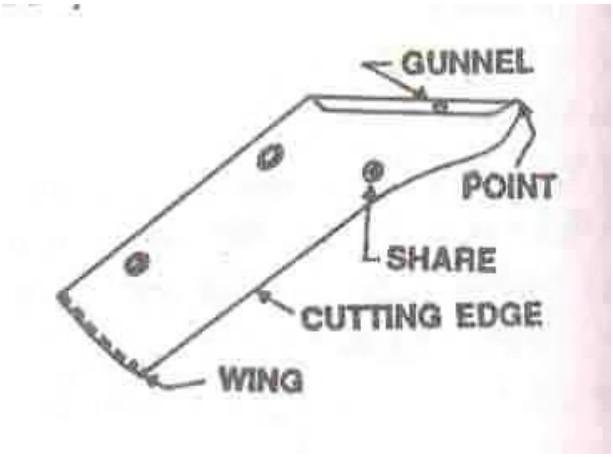

Share

a) **Share point :** It is the forward end of the cutting edge which actually penetrates into the soil

b) **Cutting edge:** It is the front edge of the share which makes horizontal cut in the soil. It is beveled to some distance.

c) **Wing of share:** It is the outer end of the cutting edge of the share. It supports the plough bottom

d) **Gunnel:** It is the vertical face of the share which slides along the furrow wall. It takes the side thrust of the soil and supports the plough bottom against the furrow wall .

e) **Cleavage edge:** It is the edge of the share which forms joint between moulboard and share on the frog.

f) **Wing bearing:** It is the level portion of the wing of the share, providing a bearing for the outer corner of the plough bottom.

Material of share: The shares are made of chilled cast iron or steel. The steel mainly contains about 0.70 to 0.80% carbon and about 0.50 to 0.80% manganese besides other minor elements.

5.2.2. Types of Shares

Share is of different types such as i) Slip share ii) Slip nose share iii) Shin share and iv) Bar point share.

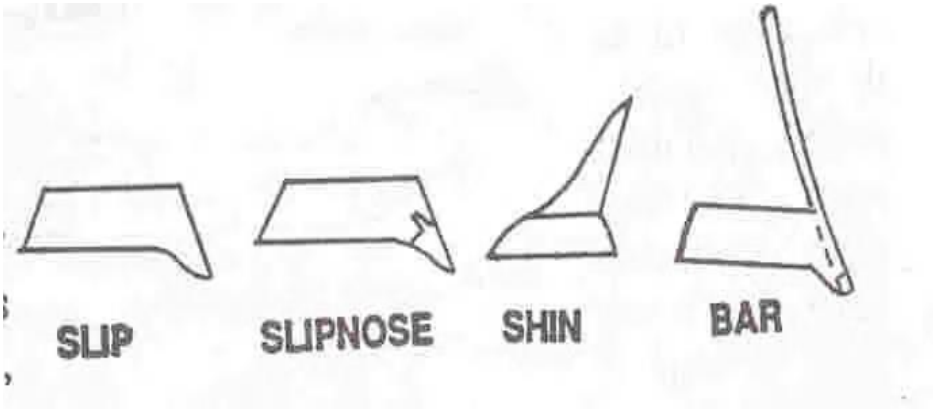

Types of shares

i) Slip share: It is one piece share with curved cutting edge, having no additional part. It is a common type of share, mostly used by the farmers. It is simple in design, but it has got the disadvantage that the entire share has to be replaced if it is worn out due to constant use .

ii) Slip nose share: It is a share in which the point of share is provided by a small detachable piece. It has the advantage that the share point can be replaced as and when required. If the point is worn out, it can be changed with a new nose without replacing the entire share, effecting considerable economy.

iii) Shin share: It is the share having a shin as an additional part. It is similar to the slip share with the difference that an extension is provided to it by the side of the mouldboard

iv) Bar point share: It is the share in which the point of the share is provided by an adjustable and replaceable iron bar. This bar serves the purpose of share point and land side of the plough.

5.2.3. Mouldboard: It is that part of the plough which receives the furrow slice from the share. If lifts, turns and breaks the furrow slice. To suit different soil conditions and crop requirements, mouldboard has been designed in different shapes. The mouldboard is of following types: a) General purpose b) Stubble type c) Sod or Breaker type and d) Slat type.

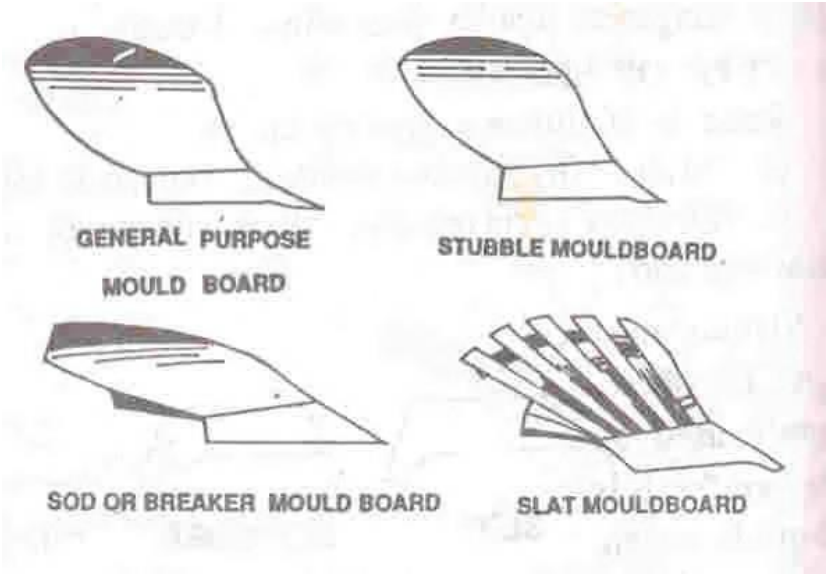

Types of mould board

a) General purpose: It is a mouldboard having medium curvature lying between stubble and sod types. The mouldboard is fairly long with a gradual twist, the surface being slightly convex. The sloping of the surface is gradual. It turns a well defined furrow slice and pulverizes the soil thoroughly.

b) Stubble type: It is short but broader mouldboard with a relatively abrupt curvature which lifts, breaks and turns the furrow slice. .This is best suited to work in stubble soil that is under cultivation for years together. Stubble soil is that soil in which stubble of the plants from the previous crop is still left on the land at the time of ploughing. This type of mouldboard is not suitable for lands with full of grasses.

Sod or Breaker type: It is a long mould board with gentle curvature which lifts and inverts the unbroken furrow slice.. It turns over thickly covered soil. This is very useful where complete inversion of soil is required by the farmer. This type has been designed for used in sod soils (soil with much of grass).

d) Slat type: It is a mouldboard whose surface is made of slats placed along the length of the mouldboard, so that there are gaps between the slats. This type of mouldboard is often used, where the soil is sticky, because the solid mouldboard does not scour well in sticky soils.

5.2.4. Land side: It is the flat plate which presses against and transmits lateral thrust of the plough bottom to the furrow wall (Fig.6). It helps to resist the side pressure exerted by the furrow slice on the mouldboard. It also helps in stabilizing the plough while in operations. Land side is fastened to the frog with the help of plough bolts. The rear bottom end of the land side is known as **heel** which rubs against the furrow sole.

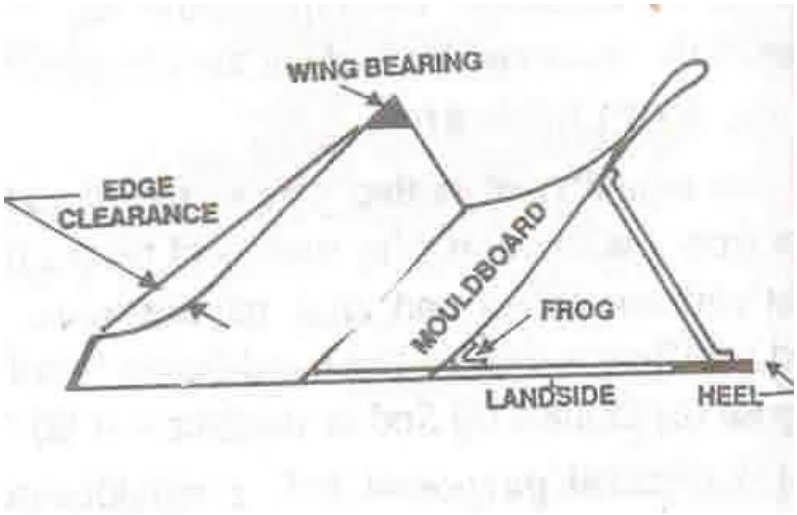

Mould board bottom

4) Frog: Frog is that part of the plough bottom to which the other components of the plough bottom are attached. It is an irregular piece of metal. It is made of cast iron for cast iron ploughs or it may be welded steel for steel ploughs.

5) Tail piece: It is an important extension of mouldboard which helps in turning a furrow slice.

5.3. PLOUGH ACCESSORIES

There are a few accessories necessary for efficient function of the plough. They are (i) Jointer (ii) Coulter (iii) Gauge wheel (iv) Land wheel and (v) Furrow wheel.

a) Jointer

It is a small irregular piece of metal having a shape similar to an ordinary plough bottom. It looks like a miniature plough. Its purpose is to turn over a small ribbon like furrow slice directly in front of the main plough bottom. This small furrow slice is cut from the left and upper side of the main furrow slice and is inverted so that all trashed on the top of the

soil are completely turned down and buried under the right hand corner of the furrow.

b) Coulter

It is a device used to cut the furrow slice vertically from the land ahead of the plough bottom. It cuts the furrow slice from the land and leaves a clear wall. It also cuts trashes which are covered under the soil by the plough. The coulter may be (a) Rolling type disc coulter or (b) Sliding type knife coulter.

Rolling type disc coulter

It is a round steel disk which has been sharpened on the edge and suspended on a shank and yoke from the beam. The edge of the coulter may be either smooth or notched. It is so fitted that it can be adjusted up-down and side ways. The up-down adjustment takes care of depth and sideways adjustment is meant for taking care of width of cut.

Sliding type knife coulter

It is a stationary knife fixed downward in a vertical position on the beam. The knife does not roll over the ground but slides on the ground. The knife may be of different shapes and sizes.

c) Gauge wheel

It is an auxiliary wheel of an implement to maintain an uniform depth of working.

Gauge wheel helps to maintain uniformity in respect of depth of ploughing in different soil conditions. It is usually placed in hanging position.

d) Land wheel - It is the wheel of the plough which runs on the ploughed land.

e) Front furrow wheel - It is the front wheel of the plough which runs in the furrow.

f) Rear furrow wheel - It is the rear wheel of the plough which runs in the furrow.

5.4. ADJUSTMENT OF MOULDBOARD PLOUGH

For proper penetration and efficient work by the mouldboard plough, some adjustments are made from time to trime. They are (i) Vertical suction and (ii) Horizontal suction.

a) Vertical suction (Vertical clearance)

It is the maximum clearance under the land side and the horizontal

surface when the plough is resting on a horizontal surface in the working position. It is also defined as the vertical distance from the ground, measured at the joining point of share and land side. It helps the plough to penetrate into the soil to a proper depth. This clearance varies according to the size of the plough.

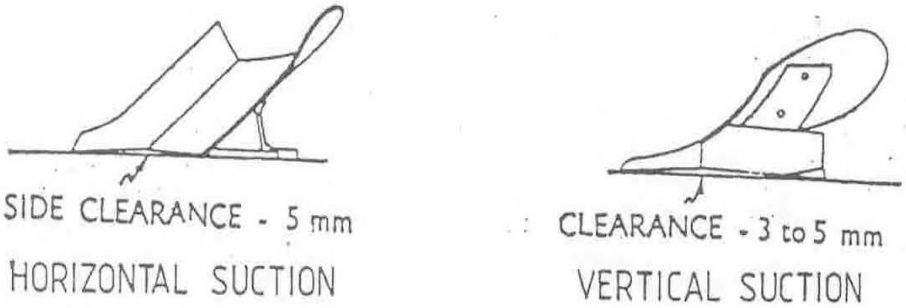

b) Horizontal suction (Horizontal clearance)

It is the maximum clearance between the land side and the furrow wall. This suction helps the plough to cut the proper width of furrow slice. This clearance also varies according to the size of the plough. It is also known as side clearance.

c) Throat clearance

It is the perpendicular distance between share point and lower position of the beam of the plough .

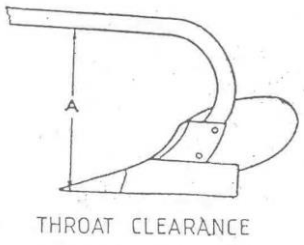

Throat clearance

of plough 5.5.TYPES OF MOULDBOARD PLOUGHS

1) Fixed type (one way) mouldboard plough

One way plough throws the furrow slice to one side of the

direction of travel and is commonly used everywhere. It may be long beam type or short beam type

2) Two-way or Reversible plough

It is a mouldboard plough which turns furrow slice to the right or left side of direction of travel as required. Such ploughs have two sets of opposed bottoms. In such a plough, all furrows can be turned towards the same side of the field by using one bottom for one direction of travel and the other bottom on the return trip. Two sets of bottom are so mounted that they can be raised or lowered independently or rotated along an axis. Two way ploughs have the advantage that they neither upset the slope of the land nor leave dead furrows or back furrows in the middle of the field.

3) Turn wrest plough

There are some reversible ploughs which have single bottom with an arrangement that the plough bottom is changed from right hand to left hand or vice versa by rotating the bottom through approximately 180° about a longitudinal axis. This type of plough is called turn wrest plough . While moving in one direction, the plough throws the soil in one direction and at the return trip the direction of the plough bottom is changed, thus the plough starts throwing the soil in the same direction as before.

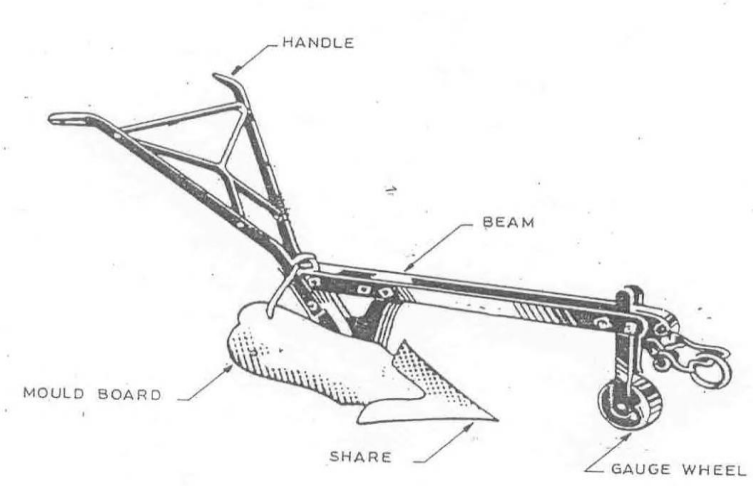

Turn wrest plough

5.6. OTHER TERMS CONNECTED WITH PLOUGHS

a) Vertical clevis

It is a vertical plate with a number of holes and fitted at the end of the beam. By using the clevis depth of operation and line of pull are adjusted.

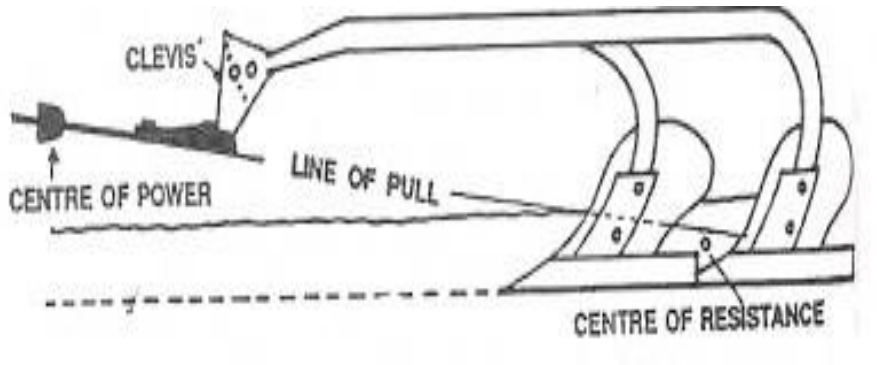

Clevis and line of pull

b) Horizontal clevis

It is a device used to make lateral adjustment of the plough relative to the line of pull.

c) Plough size

The perpendicular distance from wing of the share to the line jointing the point of the share and heel of land side is called size of plough. The size of the plough is also called as width of cut of the soil.

d) Centre of power

It is the true point of hitch of a tractor

e) Centre of resistance: It is the point at which the resultant of all the horizontal and vertical forces act. The center lies at a distance equal to ¾ size of the plough from the share wing

f) Line of pull: It is the line passing through the centre of pull, the hitch point and centre of resistance

g) Pull

It is the total force required to pull an implement.

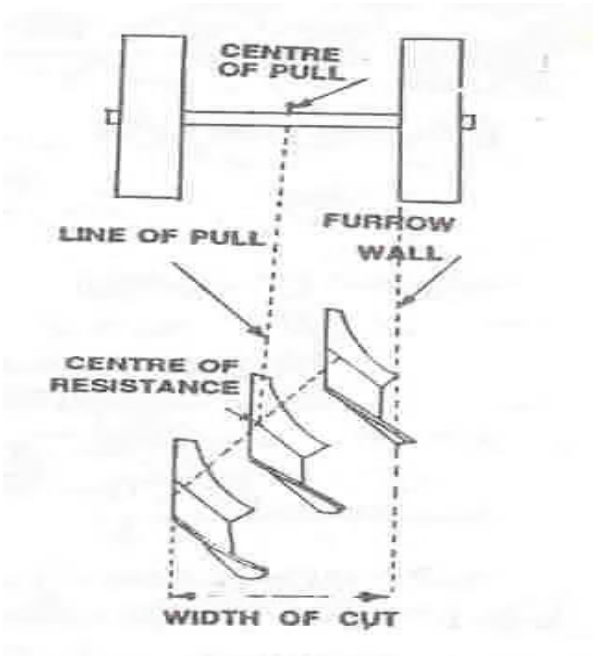

Centre of resistance

h) Draft

It is the horizontal component of the pull, parallel to the line of motion. Draft , D = P cos □

Where D = draft in kg_f

P = pull in kg_f

□ = angle between line of pull and horizontal.

i) Horse power

$$HP = \frac{\text{Draft (kgf) x speed (metres per second)}}{75}$$

Draft depends upon 1) sharpness of cutting edge 2) working speed 3) working width 4) working depth 5) type of implement 6) soil condition and 7) attachments.

j) Side draft

It is the horizontal component of the pull perpendicular to the direction of motion.

This is developed if the centre of resistance is not directly behind the centre of pull.

k) Unit draft

It is the draft per unit cross sectional area of the furrow.

6. DISC PLOUGH

A action of a disc plough is similar to the mouldboard plough. Disc plough cuts, turns and in some cases breaks furrow slices by means of separately mounted large steel concave discs. A disc plough is designed with a view to reduce friction by making a rolling plough bottom instead of sliding plough bottom as in the case of mouldboard plough. A disc plough works well in the conditions where mouldboard plough does not work satisfactorily.



.

Three bottom disc plough



Two bottom disc plough

6.1. Advantages of disc plough

- A disc plough can be forced to penetrate into the soil which is too hard and dry for working with a mouldboard plough.
- It works well in sticky soils in which a mouldboard plough does not scour.
- It is more useful for deep ploughing.
- It can be used safely in rough, stony and stumpy soils without much danger of breakage.
- A disc plough works well even after a considerable part of the disc is worn out in abrasive soils.
- It works well in loose soils also (such as peat) without much clogging.

6.2. Disadvantages of disc plough

- It is not suitable for covering surface trash and weeds as effectively as a mouldboard plough
- Comparatively, a disc plough leaves the soil in rough and cloddy condition than that of a mouldboard plough.
- Disc plough is much heavier than mouldboard plough for equal capacities because penetration of disc plough is effected largely by its weight rather than suction. (Mouldboard plough is forced into the soil by the suction of the plough, while the disc plough is forced into the soil by its own weight).

6.3. TYPES OF DISC PLOUGHS

Disc ploughs are of two types (i) Standard disc plough and (ii) Vertical disc plough.

1. Standard disc plough

A standard disc plough consists of a series of individually mounted, inclined disc blades on a frame supported by wheels. These ploughs usually have from 2 to 6 disc blades, spaced to cut 18 to 30 cm per disc. Each disc revolves on a stub axle in a thrust bearing, carried at the lower end of a strong standard which is bolted to the plough beam The discs are tilted backward at an angle of 15 – 25º from the vertical (tilt angle) and with a horizontal diameter disc face angle of 42 – 45 º (disc angle) from the direction of travel. Disc diameters are commonly 60 – 70 cm. In action,

the discs cut the soil, break it and push it sideways. There is little inversion of furrow slice as well as little burying of weeds and trashes compared to mouldboard plough. Scrapers are furnished as regular equipment on most standard disc ploughs which assist in covering trash and prevent soil build up on discs in sticky soils. Disc ploughs are most suitable for conditions under which a mouldboard plough do not work satisfactorily, such as in hard, dry soil, in sticky soils where a mould board will not scour, and in loose push type soil such as peat lands. (A mouldboard plough in soils and moisture conditions where it works satisfactorily does a better job than a disc plough and has a low specific graft)

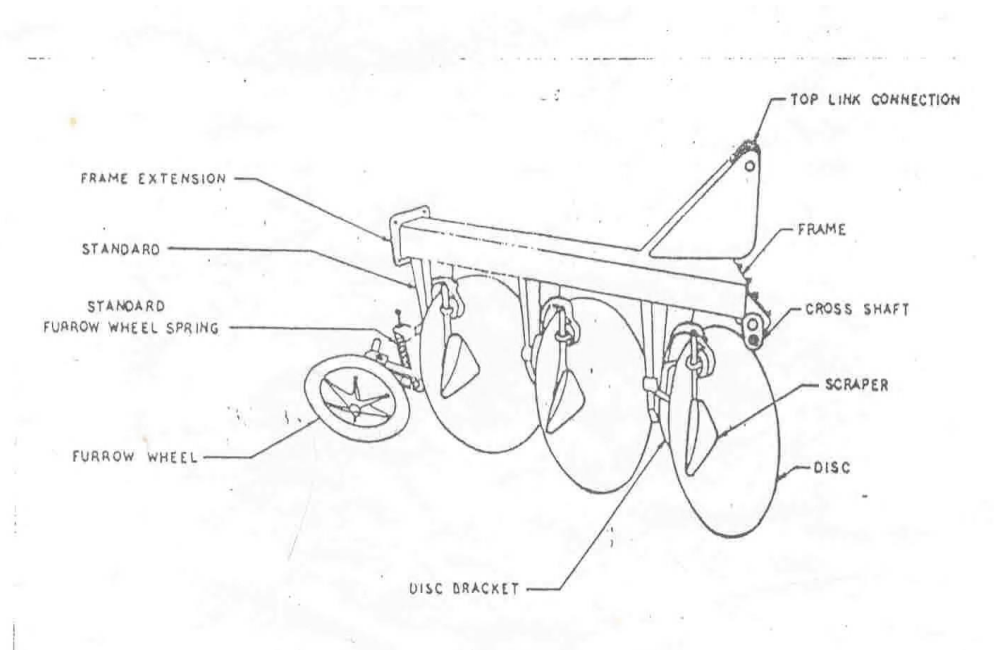

Standard disc plough

A few important terms connected with disc plough are explained below

Disc: It is a circular, concave revolving steel plate used for cutting and inverting the soil. **Disc angle:** It is the angle at which the plane of the cutting edge of the disc is inclined to the direction of travel . Usually the disc angle of good plough varies between

42° to 45°.

Tilt angle: It is the angle at which the plane of the cutting edge of the disc is inclined to a vertical line. The tilt angle varies from 15° to 25° for a

good plough.

Scraper: It is a device to remove soil that tends to stick to the working surface of a disc. **Concavity:** It is the depth measured at the centre of the disc by placing its concave side on a flat surface.

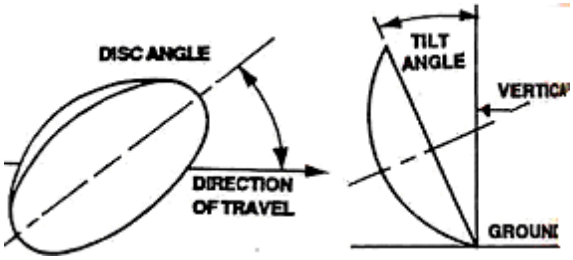

Angles of disc plough

6.4. Adjustments in disc plough

To obtain proper degree of pulverization and depth of cut there are certain adjustments to be made n the disc plough as follows

1. Increase the tilt angle to increase penetration (depth of cut)
2. Increase the disc angle to increase the width of cut. But increasing disc angle will reduce the depth of cut
3. Addition of weights on the plough will increase the penetrations
4. Keep the disc edges sharp. This will reduce the draft requirement Adjust the plough wheels properly to keep the plough running level

2. Reversible disc plough

It is similar to standard disc plough , except that it can turn over the furrow slice to left or right side. It not only improves the rate of work but also leaves the field flat and level. This plough is found very successful for contour ploughing because the operation can be performed back and forth. on the contour line without any problem. The soil is turned in the direction required to prevent soil erosion. Slopes can also be gradually leveled just by ploughing down the slope every year. It saves water and time , improves irrigation efficiency and ensures an even crop growth. and no water wastage.. The disc are rotated from one side to

another by using a lever.

7. CHISEL PLOUGH

Chisel ploughs are used to break through and shatter compacted or otherwise impermeable soil layers. Deep tillage shatters compacted sub soil layers and aids in better infiltration and storage of rainwater in the crop root zone. The improved soil structure also results in better development of root system and the yield of crops and their drought tolerance is also improved. The functional component of the unit include reversible share, tyne (chisel), beam, cross shaft and top link connection .

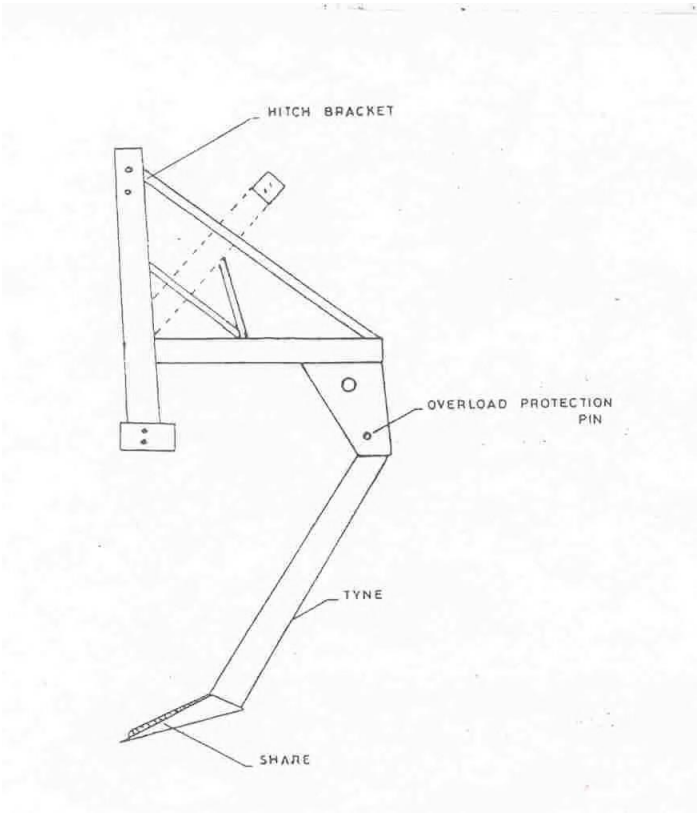

Chisel plough

Chisel plough consists of heavy chisel type tyne which is pulled through the soil normally at a depth greater than that at which conventional ploughing would be done and bursting up the underlying

layers of soil without bringing the sub-soil to the surface. The tynes of the implement are sturdy and strong enough to withstand the stresses applied when they are working at depth where the soil conditions are hardened. The implement frame is also strongly constructed usually of box section steel to withstand the stresses applied. The chisel plough has a sturdy but light structure made of 3 mm thick hollow rectangular tubular mild steel sections. The share has a lift

angle of 20 degree, width of 25 mm and a length of 150 mm. The implement is protected by a shear pin, which prevents damage from over loading. The implement could be used for deep tillage upto a depth of 40 cm. The cost of the implement is Rs.7,000/-. The coverage is

0.42 ha/hr when operated at a spacing of 1.5 m between rows. The salient features of the unit are:

- The implement could be used for deep tillage up to a depth of 40 cm for bursting of the sub-soil hard pan, improving the drainage and aerating the soil.
- Reduces the bulk density of soil
- Two fold increase in hydraulic conductivity of sub-soil
- Conserves around 30 to 40% more soil moisture
- Roots proliferation is improved from 40 to 45%
- Nutrient mobility especially N and K increased by 20 to 30% and 30 to 40% respectively.
- Enhances the crop yield by 15 to 20%
- Residual effect can be realized for three seasons
- Easily operated by any 35 to 45 hp tractor

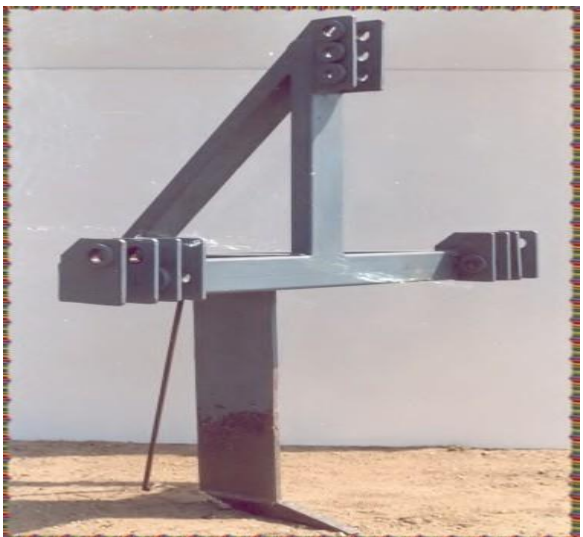



Five tyne chisel plough

8. SUB-SOIL PLOUGH

The function of the sub-soiler is to penetrate deeper than the conventional cultivation machinery and break up the layers of the soil, which have become compacted due to the movement of heavy machinery or as a result of continuous ploughing at a constant depth These compacted areas prevent the natural drainage of the soil and also inhibit the passage of air and nutrients through the soil structure. The sub-soiler consists of heavier tyne than the chisel plough to break through impervious layer shattering the sub-soil to a depth of 45 to 75 cm and requires 60 to 100 hp to operate it. The advantages are same as that of chisel plough. The cost of the unit is Rs.13, 000/-.

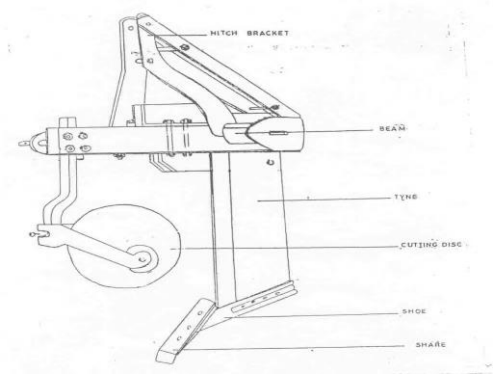

Sub soiler



Sub soiler