1Lime:

It is produced by heating limestone which is more or less pure calcium carbonate and it is used as a material for construction from ancient times.

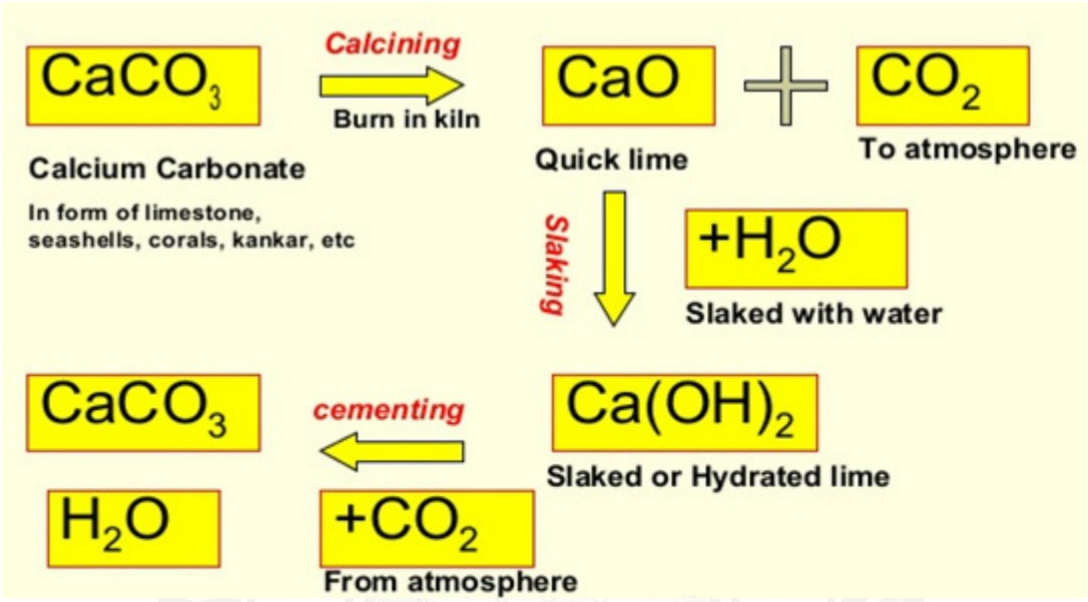

Fig 1 Process of lime

2.1.2 Properties of lime:

1. Easily workable
2. Provide strength
3. Good plasticity
4. Good resistance to moisture
5. Stiffness
6. Excellent binding
7. Fire resisting

2.1.3 Uses of lime:

1. Used as a binding material in concrete
2. Used as a binding material in brick and masonry stone
3. Used for white washing
4. Production of artificial stone,limestone brick etc
5. Used in manufacturing of paint
6. Used in soil stablization

2.1.4 Classification of lime:

1. Fat lime
2. Hydraulic lime
3. Poor lime

1.Fat lime:(rich lime/high calcium lime/pure lime)

It contain above 95% calcium oxide.

Properties:

High degree of plasticity
Perfectly white colour

Set slowly in presence of air

Uses:

Whitewashing

Plastering of walls

Mortar in stone and brick masonry

2. Hydraulic lime(water lime):

It contain clay and some amount of ferrous oxide

Properties:

Set under water

Not Perfectly white color

It contain 30%of clay so it is called as natural cement

. Poor lime:(lean lime)

Contain more than 30 %of clay
Muddy colour

Set very slowly

Poor binding property

Uses:

Unimportant work like floor lvelling,floor concrete

2.1.5Lime mortar:

Lime mortar is made by mixing lime, sand and water. Lime used for mortar may be fat lime (quick or hydrated lime) or hydraulic lime. Fat lime has high calcium oxide content. Its hardening depends on loss of water and absorption of carbon dioxide from the atmosphere and possible recrystallisation in due course. Hydraulic lime contains

silica, alumina and iron oxide in small quantities. When mixed with water it forms putty or mortar having the property of setting and hardening under water.

Slaked fat lime is used to prepare mortar for plastering, while hydraulic lime is used for masonry construction and are most suitable for construction of chimneys and lightly loaded superstructure of buildings. The mix proportions of lime mortar for various types of works are given in Table 1.

Table 1Mix Proportions

S.No	Type of Lime	Fineness modulus	Type of work
1	Sand lime	2.5	Plastering
2	Hydraulic Lime	2.5	Pointing Masonry

Notes:1. Sand in lime mortar is an adulterant, and reduces its shrinkage. Lime mortar becomes porous allowing air to penetrate and helps the mortar in hardening.

2.Lime mortar is not suitable for water-logged areas and damp situations.

Lime mortars have plasticity, good cohesion with other surfacing and little shrinkage. They harden and develop strength very slowly continuously gaining strength over long period. Fat lime mortars do not set but stiffen only as water is lost by absorption (by masonry units) and evaporation. The gain in strength is a very slow reaction of lime with carbon dioxide absorbed from air.

Preparation of lime mortar

Pounding-small quantities

Grinding –large quantities of mortar

1. Bullock driven grinding mill
2. Power driven grinding mill

Pounding:

Pit are formed on ground with lining of brick or stone at their sides and bottom.
Pit are about 1.8m long,40 cm wide at bottom,50cmwid at top and 50cm deep.
Lime and sand are mixed in dry state and placed in pit

Small quantity of water added

4 0r 5 person used to mix the mortar

Heavy wooden pounder used to mix the mortar

Required amount of water added frequently

This method is not efficient

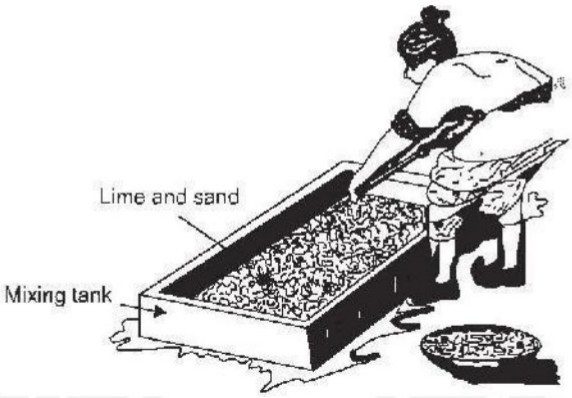

Fig. 2 Manual Mixing

Grinding:

1. Bullock driven grinding mill:

A circular trench of dia about 6 to 9m and depth 40 mm is prepared
Width 300mm

A horizontal woodn shaft posses through stone wheel

One end of shaft is attached to pivot and other end the bullock

Lime and sand are placed in trench and required quantity of water added
Bullock is turn around the mill.

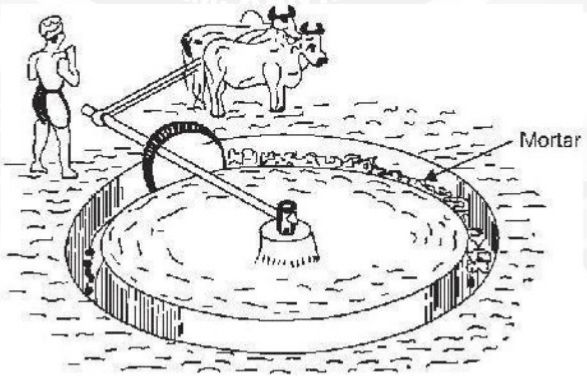

Fig. 3 Bullock Driven Mortar Mill (Ghanni)

2.Power driven grinding mill:

Power is required to mix the mortar

It contain revolving pan of dia 1.8 to 2.4 m
2 roller are provided with in pan

Pan are revolved with help of oil engine,steam engine or electric power

Lime ,sand and required amount of water added pan are revolved
This method gives better quality

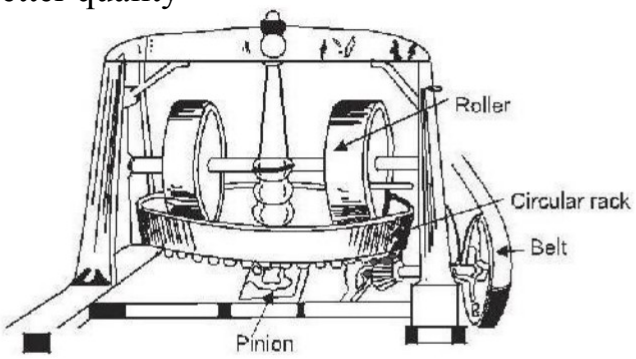

Fig. 4 Power Driven Mortor Mill (Pan Mill)

Precautions : Lime mortar or putty should be kept moist till use and in no case its drying is allowed. The mortar made of hydraulic lime should be consumed within one day and that with fat lime within 2-3 days.

2.1.6 Classification of lime mortar

1.Non hydraulic lime mortar

2. hydraulic lime mortar

3.Black mortar

1.Non hydraulic lime mortar:

Set by carbonation so exposed to co2 of air
Proportion of lime and sand are 1:2,1:3

Light in color , do not cause efflorescence

Unsuitable for damp situation , foundation , thick wall
Its setting action depends upon co2

Only used for thin joint in brick work

2. hydraulic lime mortar:

Set by hydration

These mortar are made from class A &class B
Ratio of mortar 1:2

Used for heavy engineering works

3.Black mortar

So called because of their colour
Lime mortar in 1:3

They become hard after setting